REV	ECN No.	DATE	REMARK
1	EC2010-0002_1	20100125	HISTORIC
2	EC2010-0002_2	20100302	HISTORIC
3	EC2010-0002_3	20100920	HISTORIC
A	EK2013-0247	20140118	ACTIVE

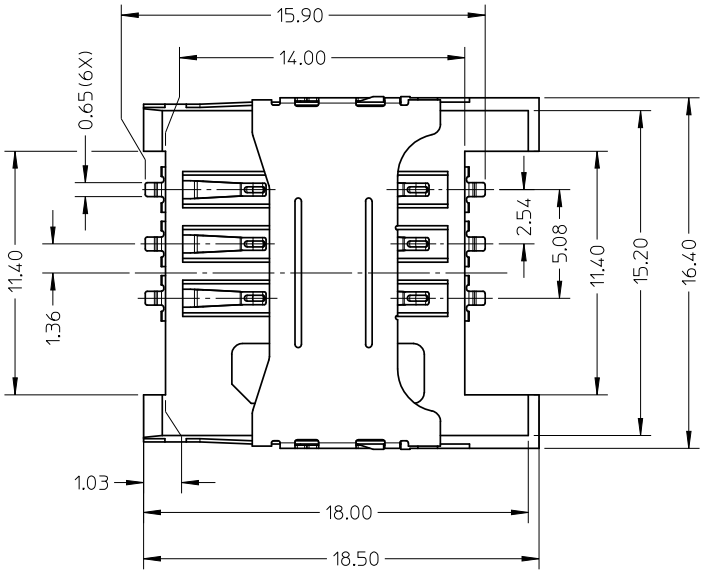

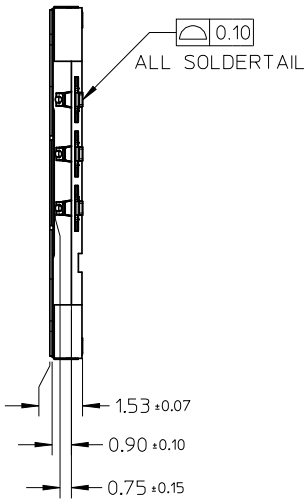

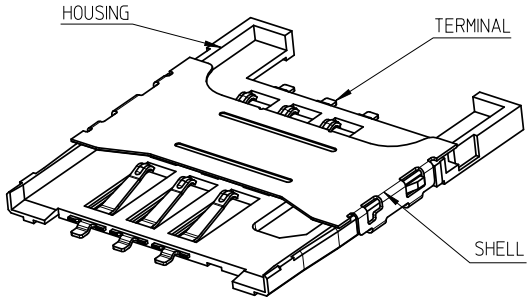

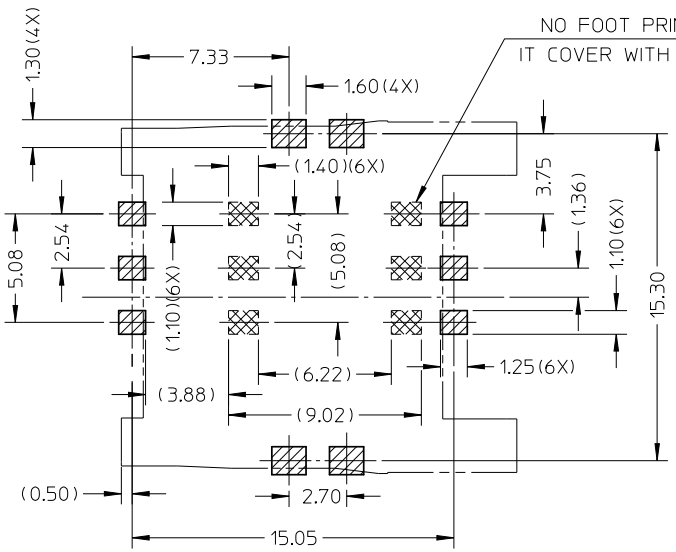

RECOMMENDED P.C.B LAYOUT
TOLERANCE: ±0.05

NOTES:
1. MATERIAL:
   HOUSING: THERMAL PLASTIC GLASS FILLED,UL 94V-0,BLACK
   TERMINAL: COPPER ALLOY
   SHELL: STAINLESS STEEL
2. PLATING:
   TERMINAL: GOLD FLASH PLATED ON CONTACT AREA
   GOLD FLASH PLATED ON SOLDERTAIL AREA
   NICKEL PLATED 1.27 MICROMETER/50u" MIN OVER ALL
   SHELL: GOLD FLASH PLATED ON SOLDERTAIL AREA
   NICKEL PLATED 1.27 MICROMETER/50u" MIN OVER ALL
3. PRODUCT SPECIFICATION REFER TO: PS-10053-001
4. PACKAGE SPECIFICATION REFER TO: PK-10053-001

ROHS COMPLIANT
LEAD&HALOGEN FREE

MATERIAL NO.: 10053–1021

REVIEW TABLE FOR DETAILS

QUALITY SYMBOL ▶ = 0 ▽ = 0

GENERAL TOLERANCES (UNLESS SPECIFIED)	
X.XXXX	± ---
X.XXX	± ---
X.XX	± 0.20
X.X	± 0.25
ANGULAR	±--°

THIS DRAWING CONTAINS INFORMATION THAT IS PROPRIETARY TO Bellwether Electronic Corp. AND SHOULD NOT BE USED WITHOUT WRITTEN PERMISSION

TITLE: SIM CARD CONNECTOR 2.54MM PITCH,6 CIRCUITS SMT TYPE 1.5H

ECN DESCRIPTION: ADD PS/PK AND MODIFY PLATING

Bellwether Electronic Corp.

DRAWN BY: Eric Bai	DATE: 20140118	
CHECKED BY	DATE: 20140118	
APPROVED BY	DATE: 20140118	
DOCUMENT NO.: SD-10053-001	SHEET NO.: 1 OF 1	
DIMENSION STYLE: MM ONLY	DESIGN UNITS: METRIC	SCALE: 4:1

THIRD ANGLE PROJECTION

frame size: A4
QR-QP025-06 REV.:A