REV	ECN No.	DATE	REMARK
1	EC2010-0009_1	20100311	HISTORIC
A	EK2013-0247	20140118	ACTIVE

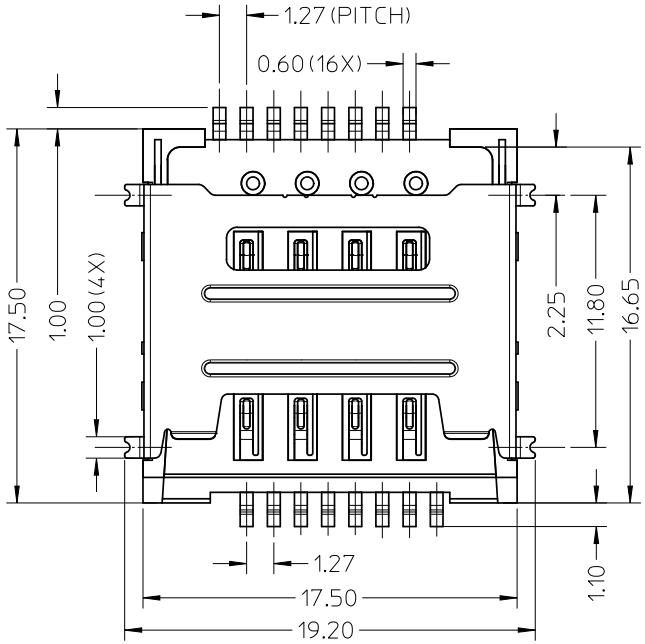

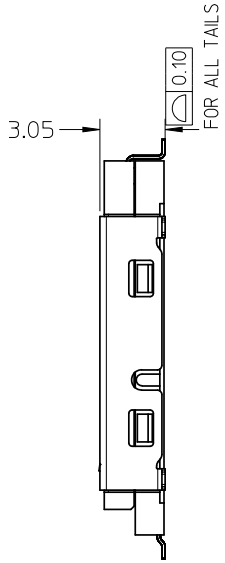

NOTES:
1. MATERIAL:
   HOUSING: THERMOPLASTIC GLASS FILLED, UL 94V-0, BLACK
   TERMINAL: COPPER ALLOY
   SHELL: STAINLESS STEEL
2. PLATING:
   TERMINAL: GOLD FLASH PLATED ON CONTACT AREA
   GOLD FLASH ON SOLDER TAIL AREA
   NICKEL UNDER PLATED 50U" MIN OVER ALL
   SHELL: GOLD FLASH ON SOLDER AREA
   NICKEL UNDER PLATED 50U" OVER ALL
3. PRODUCT SPECIFICATION IS REFERED TO: PS-10054-001
4. PACKING SPECIFICATION IS REFERED TO: PK-10054-001

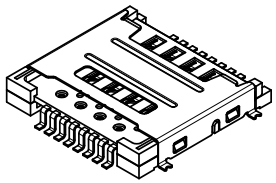

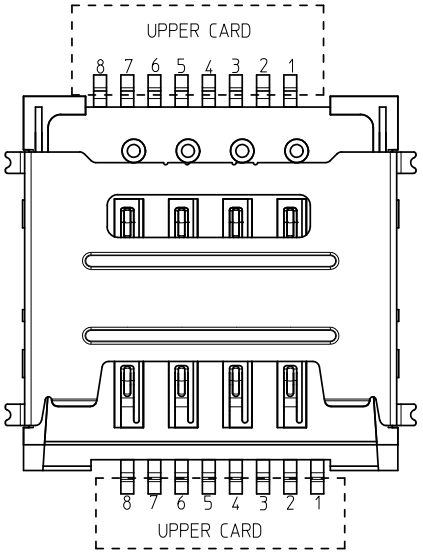

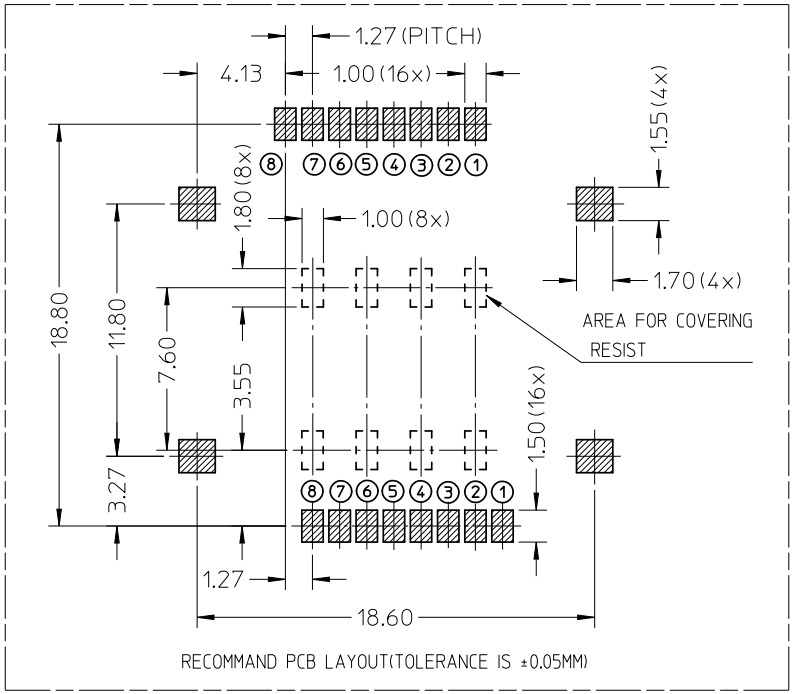

RECOMMAND PCB LAYOUT(TOLERANCE IS ±0.05MM)

ROHS COMPLIANT
LEAD&HALOGEN FREE

MATERIAL NO.:
10054–1021

REVIEW TABLE FOR DETAILS

QUALITY SYMBOL ▶ = 0 ▽ = 0

GENERAL TOLERANCES (UNLESS SPECIFIED)	
x.xxxx	± ---
x.xxx	± ---
x.xx	± 0.20
x.x	± 0.25
ANGULAR	±--°

THIS DRAWING CONTAINS INFORMATION THAT IS PROPRIETARY TO Bellwether Electronic Corp. AND SHOULD NOT BE USED WITHOUT WRITTEN PERMISSION

TITLE: 3.05H DUAL SIM CONNECTOR 1.27MM PITCH SMT TYPE

Bellwether Electronic Corp.

ECN DESCRIPTION: ADD PS/PK NUMBER

DRAWN BY: Eric Bai	DATE: 20140118	
CHECKED BY	DATE: 20140118	
APPROVED BY	DATE: 20140118	

DOCUMENT NO.: SD-10054-001 | SHEET NO.: 1 OF 1

DIMENSION STYLE	DESIGN UNITS	SCALE
MM ONLY	METRIC	5:1

THIRD ANGLE PROJECTION

frame size: A4
QR-QP025-06 REV.:A